The new generation Turbo Pumps
with Agilent Floating Suspension

# AGILENT TWISTORR FS TURBO PUMPS

## AGILENT QUALITY ASSURED

TwisTorr 304 FS

TwisTorr 84 FS

The Measure of Confidence

VACUTEC

Agilent Technologies

# Agilent TwisTorr FS Turbo Pumps

## Agilent Quality Assured

### A new category of Turbomolecular Pumps

The TwisTorr 84 FS and 304 FS are compact, reliable, energy efficient best-in-class 80 and 300 l/s Turbo drag packages, with innovative, breakthrough technologies leading to outstanding performance, and designed for reliability, to meet highest quality standard.

| | | |
|---|---|---|
| 2015 | | **Agilent expands the TwisTorr family with the new 84 FS** |
| 2013 | 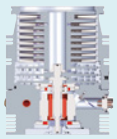 | • Agilent launches the TwisTorr 304 FS with Floating Suspension, the patented innovative, most reliable and high performing 300 L/s pump in the market |
| 2010 | | • Agilent Technologies, having acquired Varian, presents the new TwisTorr molecular drag technology based on its well-known hybrid Turbo Molecular Pump design, introducing a spiral drag section that achieves unmatched performance in both pumping speed and compression ratio in the most compact space available. New state-of-the-art electronics complete this industry leading Turbomolecular Pump innovation |
| 2004 | | • Varian develops a dedicated range of SEM products that meets the most stringent requirements of the industry |
| 2003 | | • With the Turbo-V 2K-G Varian, now Agilent, introduces a fully integrated Turbo pumping system |
| 1996 | | • Introduction by Varian of microprocessor-based on-board controller units: Navigator line, for computer driven plug-and-pump operation |
| 1991 | | • Varian introduces a new hybrid type Turbomolecular Pump: one monolythic rotor provides both high speed (Turbo stages) and high foreline tolerance (MacroTorr stages)<br>• Use of ceramic ball bearings with life-time lubrication using a proprietary dry solid lubricant |
| 1986 | | • Varian begins collaboration with Elettrorava for turbomolecular pump technology and know-how transfer |

### Agilent Quality and Reliability

**Your Benefit**

- Reduced cost of ownership and system down-time
- Improved reliability
- Proven robustness
- Agilent quality standards

**84FS Features**

- Agilent Floating Suspension (FS)
- Optimized thermal design
- Precise positioning of bearings and rotor

### Easy System Integration

**Your Benefit**

- Compact design
- Plug & play
- Easy pump driving and monitoring
- Operation in any position
- Oil-free solution

**84FS Features**

- Ceramic ball bearings with permanent lubrication
- PCB, Onboard, Rack Control Units with Serial and Profibus communication
- Retrofitable to any pump of similar size

# Your solution for high performance, quality, and reliability

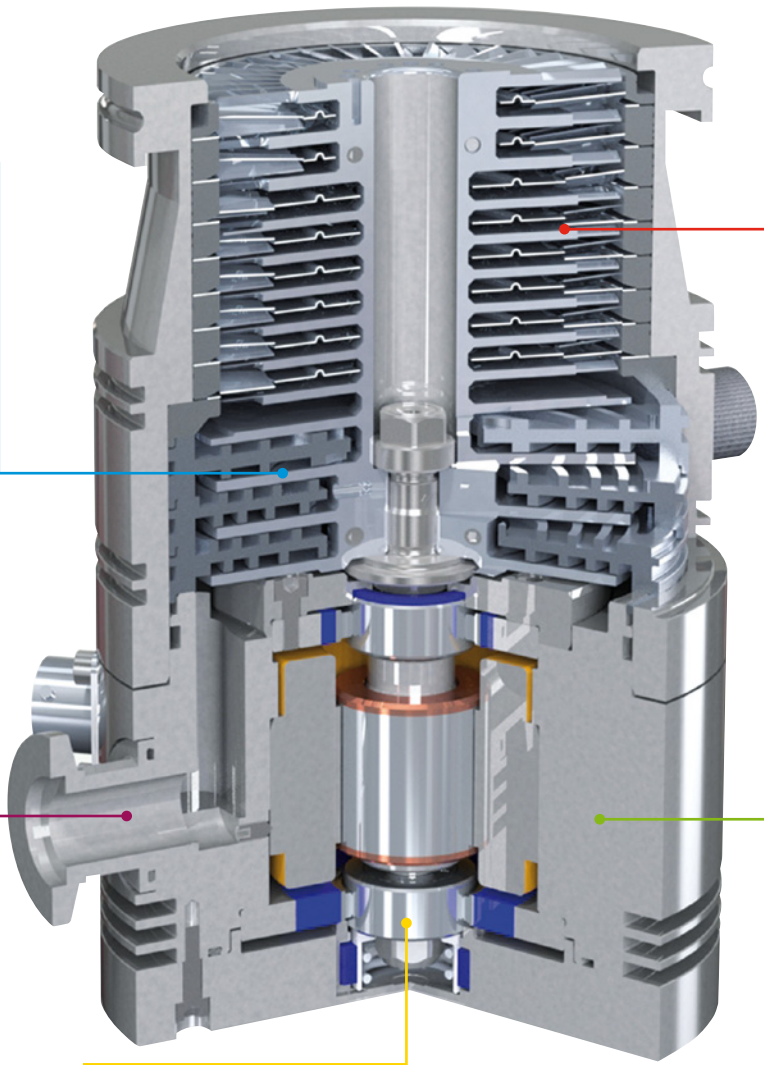

## Superior Performance

**Your Benefit**

- Low ultimate pressure
- Fast pumpdown
- Smaller/less expensive backing pump
- Suitable for high gas load applications
- Lower power consumption

**84FS Features**

TwisTorr Drag Stages allow for:

- Superior compression ratio
- High foreline pressure tolerance
- Best-in-class pumping speed

## Quiet and Low-Vibration

**Your Benefit**

- Excellent vibration level (damping effect)
- Quiet pump during operation

**84FS Features**

- Agilent Floating Suspention

| How Quiet is the TwisTorr 84 FS? | |
|---|---|
| **Noise** | **dBA** |
| Chainsaw; thunder clap | **120** |
| Car horn (1m); live rock music | **110** |
| Lawn mower; airplane take off (1km) | **100** |
| Motorcycle (8m away) | **90** |
| Freight train (25m); food blender | **80** |
| Cars on freeway; vacuum cleaner | **70** |
| Air conditioner (30m); office noise | **60** |
| Rotary Vane Pump | **55** |
| IDP-15, or conversation at home | **50** |
| Competitor's Pump | **48** |
| Library or **TWISTORR 84 FS** | **40** |

## Stability Over Time

**Your Benefit**

- Stable noise and vibration performance over time.

**84FS Features**

- Agilent Floating Suspention
- Bearings and rotor stable/constant positioning over time

# What is TwisTorr?

The new molecular-drag technology

## Agilent TwisTorr Technology*

- Pumping effect is created by a spinning rotor disk which transfers momentum to gas molecules.
- Gas molecules are forced to follow spiral groove design on the stator. The specific design of the channel ensures constant local pumping speed and avoids reverse pressure gradients, minimizing power consumption.

(*) US Patents applications 12/343961 and 12/343980, 24 Dec. 2008.

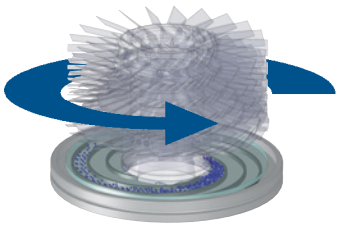

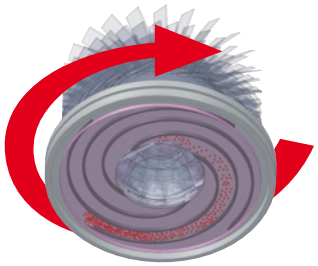

***Centripetal pumping action***

Lower surface area of rotating disk transfers momentum to gas molecules.

Spiral groove design on the upper section of the TwisTorr stator causes a **centripetal** pumping action (**Blue** colored gas flow).

***Centrifugal pumping action***

Upper surface area of rotating disk transfers momentum to gas molecules.

Spiral groove design on the lower section of the TwisTorr stator causes a **centrifugal** pumping action (**Red** colored gas flow).

## Leading Edge Performance

- The TwisTorr Pumps offer the highest pumping speed in their category for all gases.
- The state of the art TwisTorr technology also achieves the highest compression ratios for light gases in a commercially available Turbo Molecular Pump.
- While offering the highest performance, average power consumption by the new drag section design is reduced by a factor of x4, compared to previous designs.

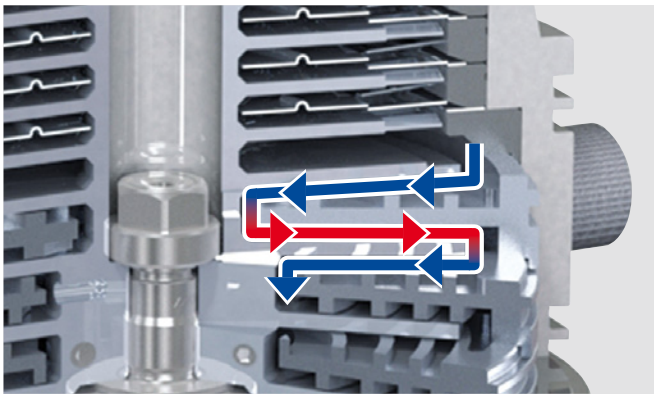

*Gas flow in centripetal and centrifugal direction through TwisTorr channels*

## Space Saving Design

- Our rotor is based on the proven Agilent monolithic rotor design which positions the TwisTorr Stator between two smooth spinning disks and therefore exploits the pumping action by both disk surfaces in series.
- The double-sided spiral groove design on the TwisTorr stators combines centripetal and centrifugal pumping action in series, greatly reducing the size of the drag section.

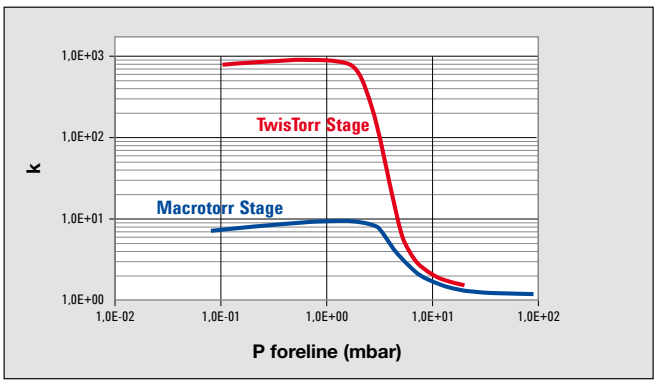


## Compression ratio

- Compression ratio for $N_2$ of a single TwisTorr stage can increase up to a factor of 100 with respect to a MacroTorr stage of the same space and rotor speed, without reducing foreline tolerance and pumping speed.

# Agilent Floating Suspension

Innovative solutions for low vibration and stability over time

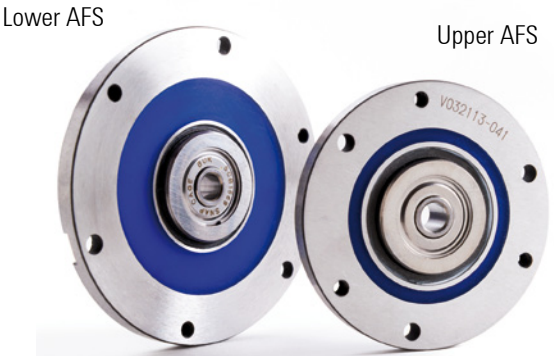


## To ensure

- Low vibration and acoustical noise
- Optimal working conditions for the bearings, extended operating life
- Exceptional stability for the very demanding SEM application

- AFS geometrical precision guarantees perfect bearing alignment
- Designed radial and axial stiffness, optimized rotor dynamic behaviour and acoustic noise
- Lower AFS acts as an axial spring providing bearing preload and axial rotor positioning
- Thermal stability

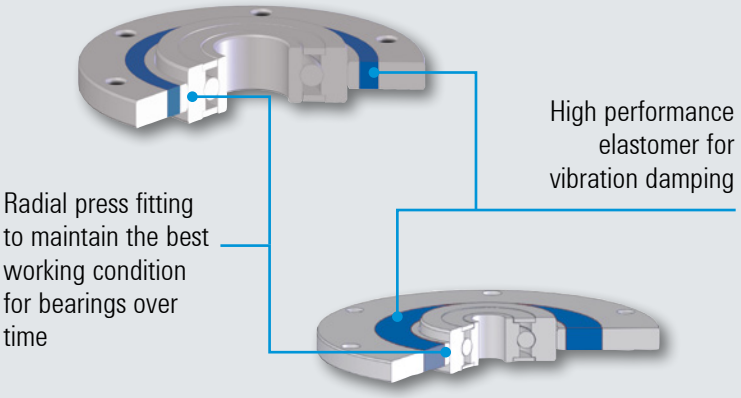


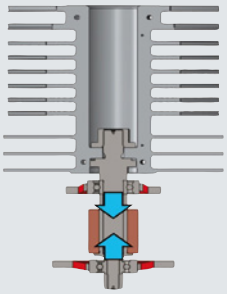


Floating rotor to improve vibration damping and control

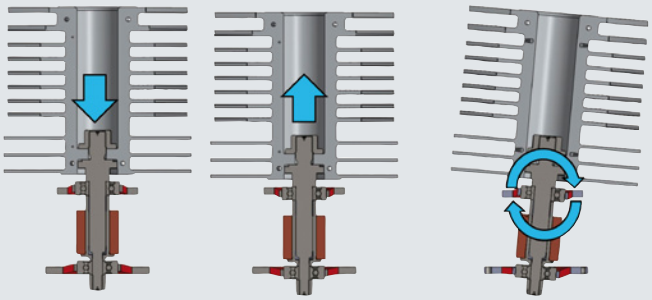

# Agilent TwisTorr 84 FS

## Technical Specifications

| **Pumping speed** | | KF40 | CFF 2.75" | ISO 63 | CFF 4.5" |
|---|---|---|---|---|---|
| Ar | l/s | 44 | 57 | 66 | 66 |
| $N_2$ | l/s | 49 | 56 | 67 | 67 |
| He | l/s | 38 | 46 | 63 | 63 |
| $H_2$ | l/s | 36 | 40 | 53 | 53 |

| **Gas throughput at full rotational speed** (with recommended forepump) | Air cooling (35°C) | Water Cooling (25°C, 65 l/h) |
|---|---|---|
| $N_2$ | 100 sccm | 100 sccm |
| Ar | 70 sccm | 70 sccm |

| **Compression ratio & Foreline Tolerance** | | |
|---|---|---|
| Ar | > 1.0 x $10^{11}$ | >14 mbar |
| $N_2$ | ≥ 1.0 x $10^{11}$ | >14 mbar |
| He | 2.0 x $10^{6}$ | >12 mbar |
| $H_2$ | 5.0 x $10^{4}$ | >4 mbar |

| | | |
|---|---|---|
| **Base pressure with recommended forepump** (5 $m^3$/h) | < 8 E-10 mbar (< 6.0 x $10^{-10}$ Torr) | |
| **Inlet flange** | CFF 4.5" O.D. | ISO 63 |
| | CFF 2.75" O.D. | KF 40 |
| **Foreline flange** | KF16 NW | |
| **Rotational speed** | 81000 rpm (1350 Hz driving frequency) | |
| **Start-up time** | < 2 minutes | |
| **Recommended forepump** | mechanical: | Agilent DS 42 / DS 102 |
| | dry pump: | Agilent SH 110 / IDP-3 |
| **Operating position** | Any | |
| **Operating ambient temperature** | +5 °C to +35 °C | |
| **Relative humidity of air** | 0 - 90 % (not condensing) | |
| **Bakeout temperature** | 80°C for ISO (120°C for CFF) at inlet flange | |
| **Lubricant** | Permanent lubrication | |
| **Cooling requirements** | | |
| - **Air Cooling** | Air flow temperature +5°C to +35 °C | |
| - **Water Cooling** | Cooling water temperature: +15 °C to +25 °C | |
| | Minimum flow: 65 l/h (0.30 GPM) | |
| | Pressure: 2 to 4 bar (45 to 75 psi) | |
| **Noise Pressure Level (at 1 mt at full speed)** | | |
| | 40 dB(A) * | |
| **Storage temperature** | -40° C to +70° C | |
| **Max altitude** | 3000 m | |
| **Weight kg (lbs)** | Pump ISO 63 | kg 2.05 |
| | Pump CFF 4.5" | kg 3.50 |
| | Pump CFF 2.75" | kg 3.34 |
| | Pump KF 40" | kg 2.37 |

*average value ± 4 dB(A) std deviation

## Pumping Speed

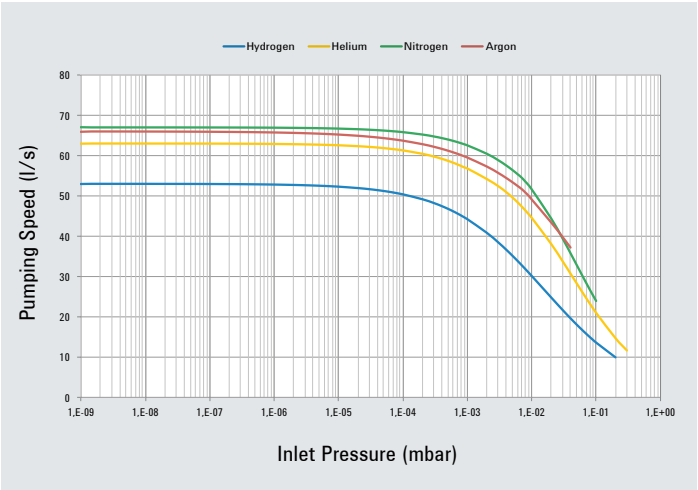


## Compression Ratio

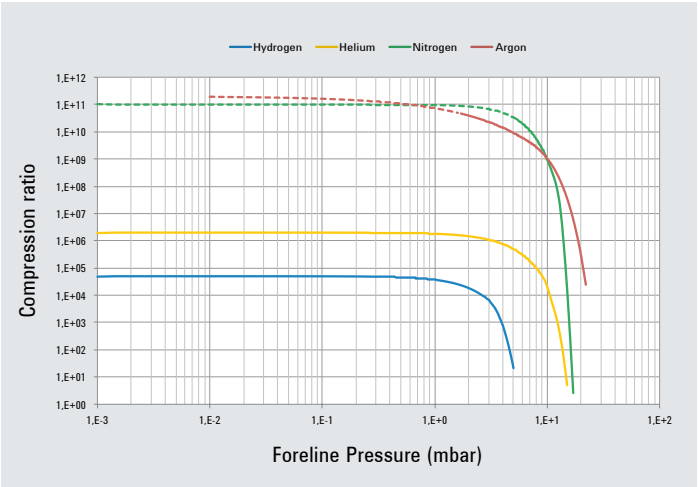

# Ordering Information

| Pumps | Part Numbers |
|---|---|
| TwisTorr 84FS ISO63 | X3502-64000 |
| TwisTorr 84FS KF40 | X3502-64001 |
| TwisTorr 84FS CFF4.5 | X3502-64002 |
| TwisTorr 84FS CFF2.75 | X3502-64003 |

| Controllers | Part Numbers |
|---|---|
| TwisTorr 84FS AG Rack controller RS232/485 | X3508-64001 |
| TwisTorr 84FS AG Rack controller Profibus | X3508-64002 |
| TwisTorr 84FS on-board controller 110/220V | X3509-64000 |
| TwisTorr 84FS on-board controller 24V | X3509-64001 |
| TwisTorr 84FS PCB Controller | X3510-64000 |

| Accessories | Part Numbers |
|---|---|
| **Cables** | |
| Mains cable NEMA plug, 3 m long | 969-9958 |
| Mains cable European plug, 3 m long | 969-9957 |
| Serial cable and T-plus software | 969-9883 |
| PCB cable | 969-9869 |
| Pump extension cable (3 m) | 969-9942 |
| Extension cable 5 m | 969-9942M007 |
| Extension cable 10 m | 969-9942M006 |
| Extension cable 15 m | 969-9942M005 |
| Extension cable 20 m | 969-9942M004 |
| **Inlet screen** | |
| Inlet screen ISO63 | X3502-68001 |
| Inlet screen CFF4.5" | X3502-68000 |
| Inlet screen, KF40 | 969-9309 |
| Inlet screen CFF 2.75" | 969-9328 |
| **Cooling** | |
| Metal Water Cooling Kit | X3502-68002 |
| Plastic Water cooling kit | X3502-68003 |
| Air cooling kit (0,5 m cable) | 969-9290 |
| Air cooling kit extension cable (5 m) | 969-9940 |
| **Vibration isolator** | |
| Vibration isolator ISO 63 | 969-9375 |
| Vibration isolator CFF 4.5" | 969-9376 |
| **Venting** | |
| Vent Valve N.O. 0,5 mm orifice (0,5 m cable) | 969-9844 |
| Vent Valve extension cable (5 m) | 969-9941 |
| Vent Valve extension cable (10 m) | 969-9941M003 |
| Vent Valve extension cable (15 m) | 969-9941M001 |
| Vent Valve extension cable (20 m) | 969-9941M005 |
| Vent Screw M5 | X3502-68005 |
| Vent Adapter kit M5-M8 | X1699-64039 |
| **Purge** | |
| Purge Screw | X3502-68004 |
| Purge valve 10 SCCM NW16KF - M12 | 969-9239 |
| Purge valve 10 SCCM ¼ Swagelok - M12 | 969-9240 |
| Purge valve 20 SCCM NW16KF - M12 | 969-9241 |
| Purge valve 20 SCCM ¼ Swagelok - M12 | 969-9242 |
| Purge valve 10 SCCM ¼ Swagelok - ¼ Swagelok | 969-9232 |
| Purge valve 20 SCCM ¼ Swagelok - ¼ Swagelok | 969-9236 |
| **Mounting** | |
| Controller side mounting bracket | X3502-68006 |
| CFF4.5 Mounting kit | X3502-68007 |
| Metric screws kit | X3502-68008 |
| American screws kit | X3502-68009 |
| **Active Gauges** | |
| FRG 700 Full Range Gauge | Ask Agilent for details |
| PVG 500 Pirani Vacuum Gauge | Ask Agilent for details |
| PCG 750 Pirani Capacitance Gauge | Ask Agilent for details |
| CDG-500 Capacitance Diaphragm Gauge | Ask Agilent for details |

# Outline Drawing

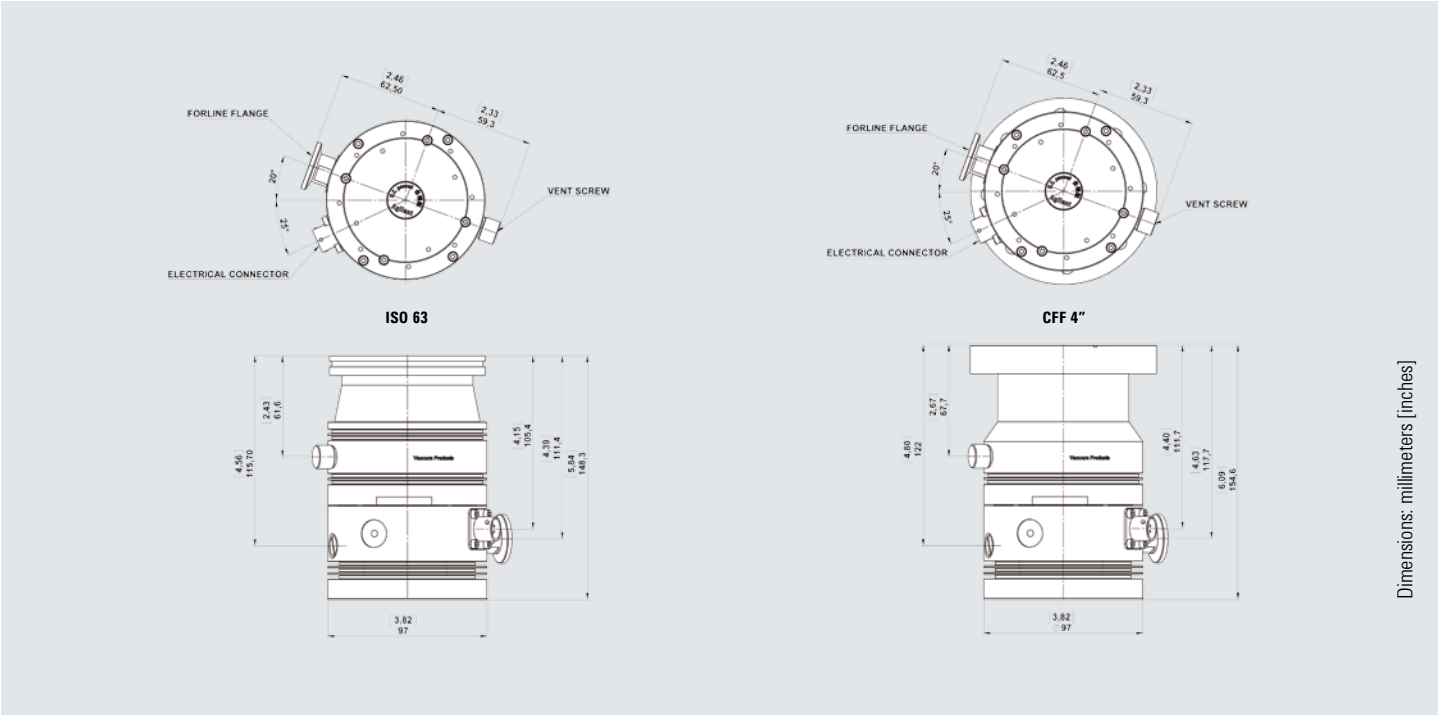

# Agilent TwisTorr 304 FS

## Pumping Speed

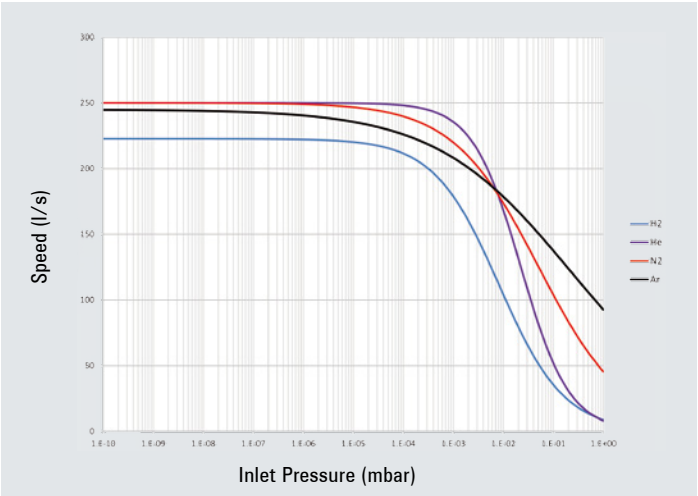


## Compression Ratio

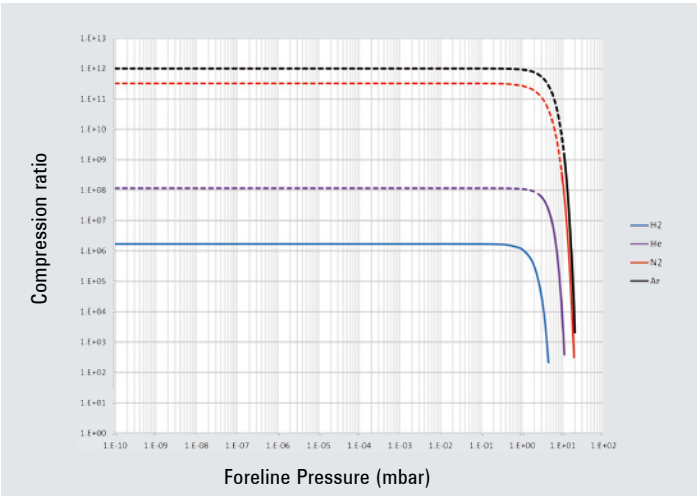


## Technical Specifications

| **Pumping speed** | ISO 100 / CF 6" | ISO 160 / CF 8" |
|---|---|---|
| $N_2$ | 250 l/s | 250 l/s |
| He | 255 l/s | 255 l/s |
| $H_2$ | 220 l/s | 220 l/s |
| Ar | 250 l/s | 250 l/s |
| **Gas throughput at full rotational speed** (with recommended forepump) | Ambient Temp. (25°C) | Water Temp. (25°C, 50 l/h) |
| $N_2$ | 170 sccm | 170 sccm |
| Ar | 110 sccm | 110 sccm |
| **Compression ratio & Foreline Tolerance** | | |
| $N_2$ | > 1 x $10^{11}$ | >10 mbar |
| He | > 1 x $10^{8}$ | >10 mbar |
| $H_2$ | 1.5 x $10^{6}$ | >4 mbar |
| Ar | > 1 x $10^{11}$ | >10 mbar |
| **Base pressure with recommended forepump** (5 $m^3$/h) | < 1 x $10^{-10}$ mbar (< 1 x $10^{-10}$ Torr) | |
| **Inlet flange** | CFF 8" O.D. ISO 160 | |
| | CFF 6" O.D. ISO 100 | |
| **Foreline flange** | KF16 NW (KF25 - optional) | |
| **Rotational speed** | 60000 rpm (1010 Hz driving frequency) | |
| **Start-up time** | < 3 minutes | |
| **Recommended forepump** | mechanical: | Agilent DS 102 |
| | dry pump: | Agilent SH 110 |
| **Operating position** | Any | |
| **Operating ambient temperature** | +5 °C to +35 °C | |
| **Relative humidity of air** | 0 - 90 % (not condensing) | |
| **Bakeout temperature** | 80 °C at inlet flange max (ISO flange) | |
| | 120 °C at inlet flange max (CFF flange) | |
| **Lubricant** | Permanent lubrication | |
| **Cooling requirements** | Forced air (5- 35 °C ambient temperature) | |
| | Water (mandatory if ambient temperature > 35 °C) | |
| **Coolant water** | Minimum flow: 50 l/h (0.89 GPM) | |
| | Temperature: +15 °C to +30 °C | |
| | Pressure: 3 to 5 bar (45 to 75 psi) | |
| **Noise Pressure level** | < 50 dB(A) at 1 meter | |
| **Storage temperature** | -40° C to +70° C | |
| **Max altitude** | 3000 m | |
| **Weight kg (lbs)** | Pump ISO 100 | 5.5 kg (12.3) |
| | Pump CFF 6'' | 7.5 kg (16.5) |
| | Pump ISO 160 | 5.7 kg (12.6) |
| | Pump CFF 8'' | 9.7 kg (20.9) |

## Conformity to norms

| | |
|---|---|
| EMC | 61326-1 |
| Safety (CE/CSA) Regulatory | DIR 2006/42/CE |
| ROHS | DIR 2011/65/EU |

# Ordering Information

| Pumps | Configuration Options |
|---|---|
| TwisTorr 304 FS ISO100 water cooling | X3500-64000 |
| TwisTorr 304 FS CFF 6" water cooling | X3500-64001 |
| TwisTorr 304 FS ISO160 water cooling | X3500-64002 |
| TwisTorr 304 FS CFF 8" water cooling | X3500-64003 |
| TwisTorr 304 FS ISO100 air cooling | X3500-64004 |
| TwisTorr 304 FS CFF 6" air cooling | X3500-64005 |
| TwisTorr 304 FS ISO160 air cooling | X3500-64006 |
| TwisTorr 304 FS CFF 8" air cooling | X3500-64007 |
| TwisTorr 304 FS ISO100 SF water cooling | X3500-64010 |

| Controllers | Part Numbers |
|---|---|
| TwisTorr 304 FS AG rack controller with RS232/485 | X3506-64002 |
| TwisTorr 304 FS AG rack controller with Profibus | X3506-64003 |
| TwisTorr 304 FS on board controller 24 Vdc | X3507-64002 |
| TwisTorr 304 FS on board controller 100-240 Vac | X3507-64003 |

| Accessories | Part Numbers |
|---|---|
| **Cables** | |
| Mains cable NEMA plug, 3 m long | 9699958 |
| Mains cable European plug, 3 m long | 9699957 |
| Serial cable and T-plus Software | 9699883 |
| Extension cable 5 m | 969-9942M007 |
| Extension cable 10 m | 969-9942M006 |
| Extension cable 15 m | 969-9942M005 |
| Extension cable 20 m | 969-9942M004 |
| **Inlet Screen** | |
| Inlet Screen ISO100 | X3500-68000 |
| Inlet Screen CFF 6" | 9699302 |
| Inlet Screen ISO160 | X3500-68001 |
| Inlet Screen CFF 8" | 9699304 |
| **Cooling** | |
| Water cooling kit | 9699337 |
| Plastic water cooling kit | 9699347 |
| Air cooling kit for On board controller | X3500-68010 |
| Fan extension cable for On board controller | 9699949 |
| Air cooling kit for rack AG controller | X3500-68011 |
| Fan extension cable for rack AG controller | 9699940 |
| **Vibration isolator** | |
| Vibration isolator ISO 100 | 9699344 |
| Vibration isolator CF 6" | 9699334 |
| Vibration isolator ISO 160 | 9699345 |
| Vibration isolator CF 8" | 9699335 |
| Vibration isolator ISO 100 IDX | 9699396 |
| Vent flange, NW 10 KF / M8 | 9699108 |
| **Venting** | |
| Delay vent valve 1.2 mm orifice | X3505-68000 |
| Delay vent valve 0.5 mm orifice | X3505-68001 |
| Vent valve N.O. for rack AG controller (0.5 mm) | 9699844 |
| Vent valve for on-board controller (1.2 mm) | 9699834 |
| Vent valve for on-board controller (0.5 mm) | 9699834M006 |
| **Purge** | |
| Purge valve 10 SCCM NW16KF - M12 | 9699239 |
| Purge valve 10 SCCM ¼ Swagelok - M12 | 9699240 |
| Purge valve 20 SCCM NW16KF - M12 | 9699241 |
| Purge valve 20 SCCM ¼ Swagelok - M12 | 9699242 |
| Purge valve 10 SCCM ¼ Swagelok - ¼ Swagelok | 9699232 |
| Purge valve 20 SCCM ¼ Swagelok - ¼ Swagelok | 9699236 |
| **Mounting** | |
| Bracket for On board controller side mounting | X3500-68012 |
| Foreline flange KF25 | X3500-68002 |
| **Active Gauges** | |
| FRG 700 Full Range Gauge | Ask Agilent for details |
| PVG 500 Pirani Vacuum Gauge | Ask Agilent for details |
| PCG 750 Pirani Capacitance Gauge | Ask Agilent for details |
| CDG-500 Capacitance Diaphragm Gauge | Ask Agilent for details |

# Outline Drawing

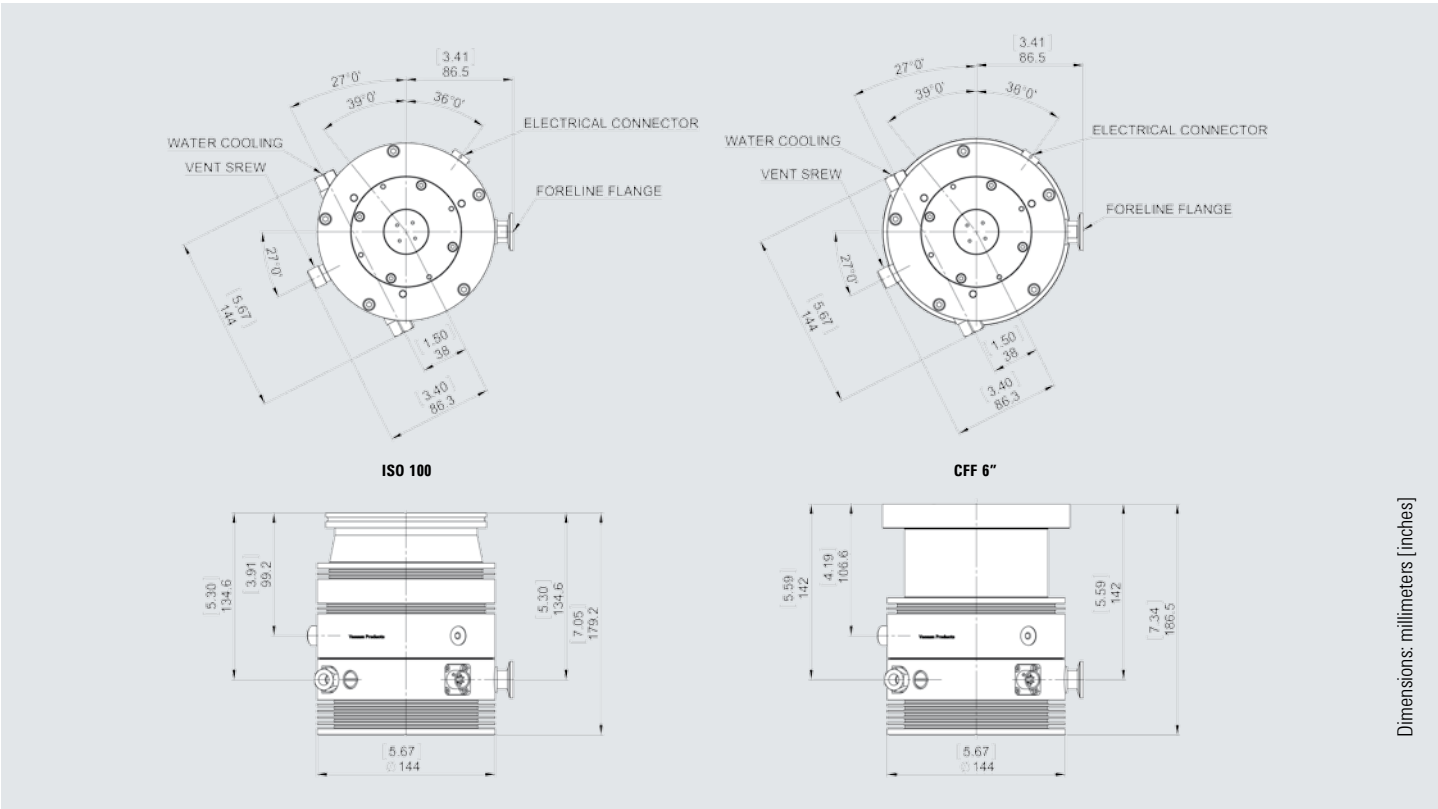

# Agilent TwisTorr 84 FS and 304 FS

The new generation Turbo Pump platform:
your solution for high performance, quality and reliability

## Applications

The new TwisTorr FS technology represents a unique blend of performance and features that is perfectly suited for a wide range of applications:

Unmatched vacuum performance in its class, with TwisTorr stages optimized for $H_2$ compression, make it the ideal solution for demanding academic and research applications

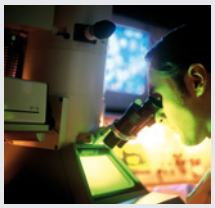

Thanks to low vibration, low noise and high stability, the TwisTorr FS turbo pumps meet the specific needs of Electron Microscopes

High throughput and optimized performance for light gases in routine applications are suited perfectly to use in analytical instruments

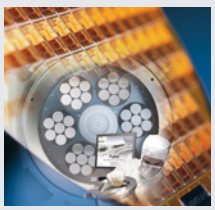

The TwisTorr FS turbo pumps offer dry, clean vacuum for demanding industrial and semiconductor applications

## Key Innovations

- TwisTorr Molecular Drag Turbo pump technology
- Optimized clearances design (radial and axial)
- Optimized thermal design
- Agilent Floating Suspension
- Optimized bearings size
- Noise <40 dB(A) at normal speed (TwisTorr 84 FS)
- Vibration stability over time
- Precise positioning of bearings and rotor

# Service & Support

To keep you up and running

## Advance Exchange

Premium Advance Exchange reduces your downtime and allows you to focus on your business success, while we take care of all the rest.

To maximize uptime and for time critical situations, Agilent offers Exchange units that are available for immediate shipment. These units are refurbished pumps and fully rebuilt to the same strict standards as new products with 24hrs response, rapid delivery and minimal downtime.

## Upgrade Program

Designed for customers who want to replace an Agilent product, at the end of its service life with a model of the latest available technology.

Within the upgrade program products rebuilt to as-new specifications are offered with a full 12-month warranty.

## Return to Agilent for Repair

With this service, you can ship your instrument to the nearest Agilent Service Center, where it is expertly repaired and then returned to you. Timely repair by Agilent will keep your product performance at an outstanding level all the time. Our specialized repair centers bring Agilent Quality Standards closer to you with fast turnaround time, Original parts and Certified Workmanship.

## Three Progressive Levels of Support

Agilent offers three convenient Service Programs to help you maximize your full stop at end.

## SERVICE & SUPPORT

# Vacutec

P.O. Box 48488
Roosevelt Park
2129
South Africa

Tel: 011 475 1823
Fax: 011 475 1819
Email: sales@vacutec.co.za
Web: www.vacutec.co.za

GRAFFIO - Ju10

QUALITY SYSTEM ISO 9001 CERTIFIED

ENVIRONMENTAL MANAGEMENT SYSTEM ISO 14001 CERTIFIED

*All specifications are subject to change without notice. Copyright by Varian SpA*

VACUTEC

NOTICE: This document contains references to Varian. Please note that Varian, Inc. is now part of Agilent Technologies. For more information, go to **www.agilent.com/chem.**

**Agilent Technologies**